QUICK-LOCK LOG CLAMP ASSEMBLY, HM130MAX

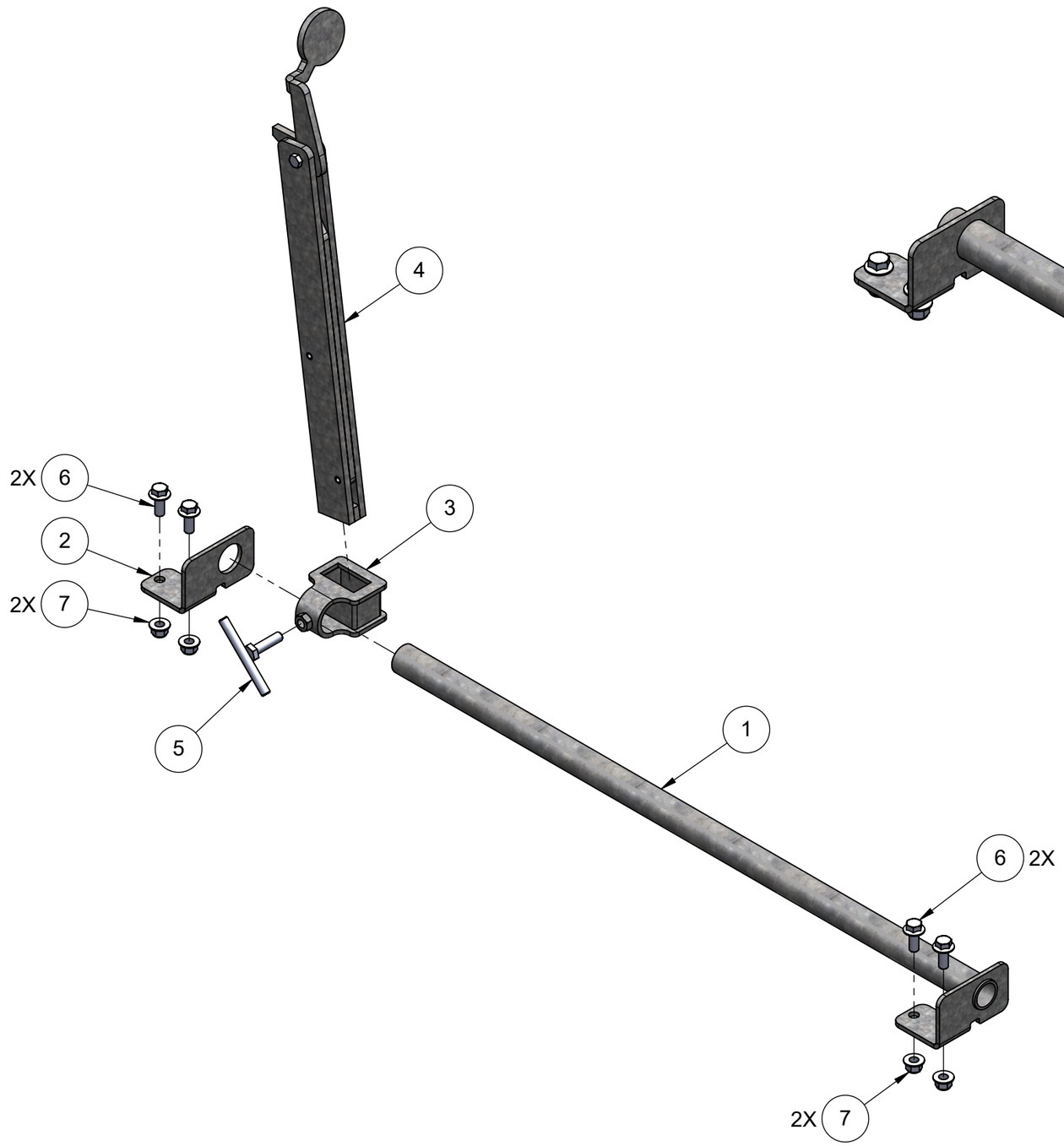

ITEM	QTY	PART NO	DESCRIPTION
7	4	FLN-MBMCL	LOCK NUT, FLANGED, CLS 10, M10 X 1.5
6	4	FHH-MBM080FCM	HEX BOLT, FLANGED, CLS 10.9, M10 X 1.5, 25 mm LG, FULL
5	1	0001059	T-BOLT, M10 X 1.5, 40 mm LG
4	1	0001211	QUICK-LOCK LOG CLAMP
3	1	0001061	RECEIVER, QUICK-LOCK LOG CLAMP
2	1	0001069	MOUNTING BRACKET, QUICK-LOCK LOG CLAMP
1	1	0002904	SHAFT WELDMENT, QUICK-LOCK LOG CLAMP, HM130MAX

PARTS LIST

NOTES:

1. DIMENSIONS LOCATED WITHIN SQUARE BRACKETS [ ] ARE IN INCHES.
2. RECOMMENDED SHIPPING BOX SIZE: 34-1/4L X 6W X 6H in [870L X 150W X 150H mm].
3. SHIPPING WEIGHT: 14.5 lb [6.6 kg].

WOODLAND MILLS FORESTRY EQUIPMENT
1431 SCUGOG LINE 6
PORT PERRY, ON L9L 0C3, CANADA
1 (855) 476-6455

SIZE	DWG NO	REV
A3	0002906	

SCALE	3:16	DATE	09-11-2021	SHEET	1 OF 1

C:\VAULTPRODUCTS\SA\MILLS_COMPONENTS\TRACKS\LOG CLAMPS\0002906