HM130MAX TRACK EXTENSION

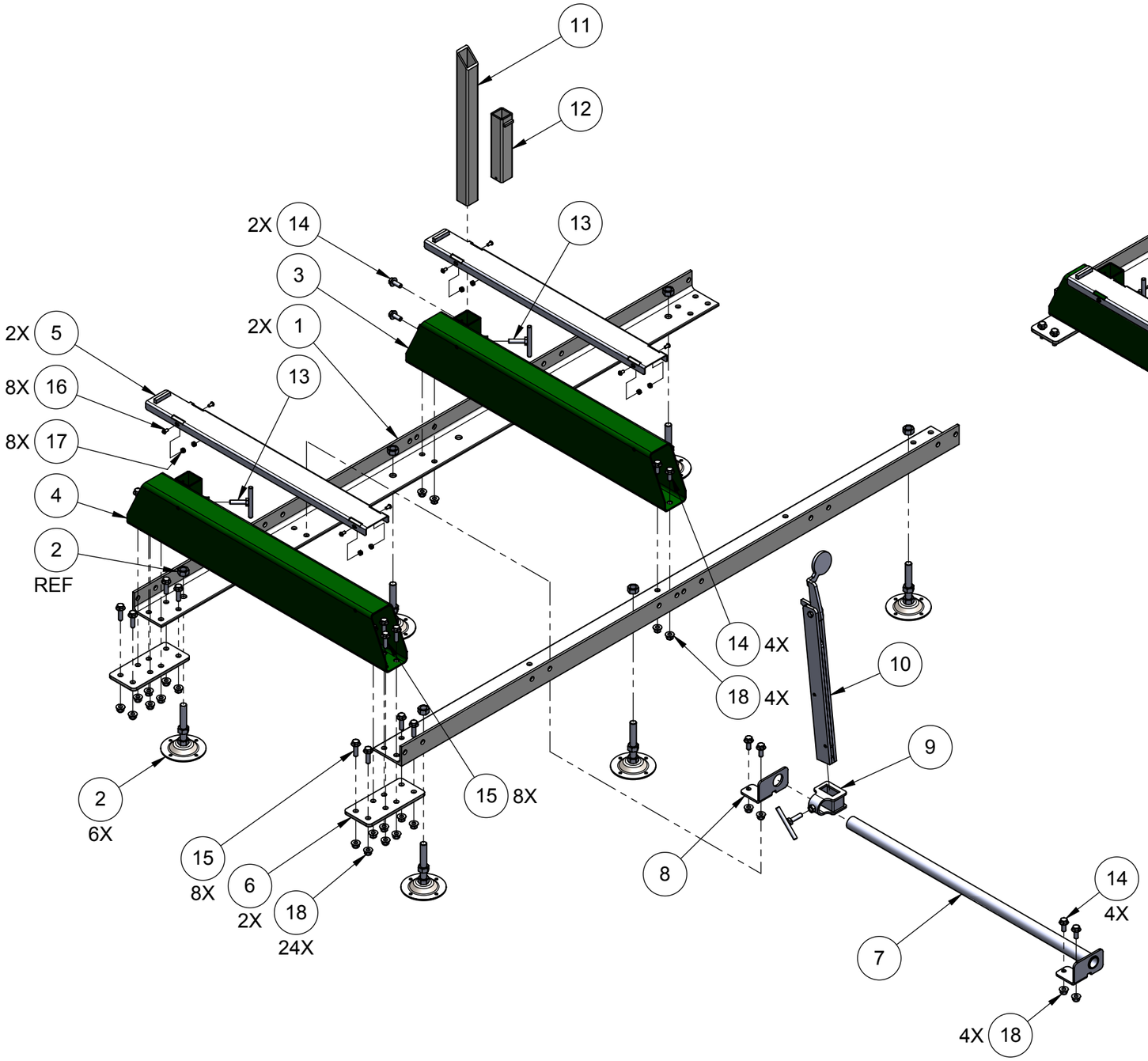

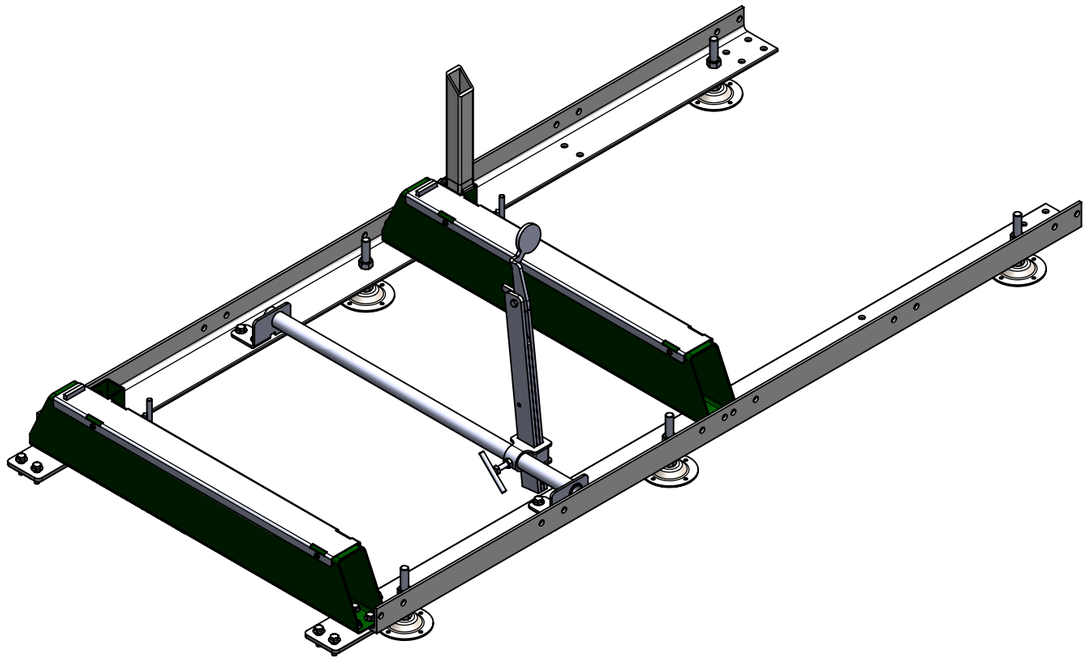

ITEM	QTY	PART NO	DESCRIPTION
18	24	HDW	LOCK NUT, FLANGED, M10 X 1.5
17	8	HDW	LOCK NUT, M6 X 1
16	8	HDW	BUTTON HEAD SCREW, M6 X 1, 12 mm LG
15	16	HDW	HEX BOLT, FLANGED, M10 X 1.5, 35 mm LG
14	10	HDW	HEX BOLT, FLANGED, M10 X 1.5, 25 mm LG
13	3	0001059	T-BOLT, M10 X 1.5, 40 mm LG
12	1	0001465	LOG SUPPORT, SHORT
11	1	0001056	LOG SUPPORT, LONG
10	1	0001211	LOG CLAMP
9	1	0001061	LOG CLAMP RECEIVER
8	1	0001069	LOG CLAMP SHAFT BRACKET
7	1	0002904	LOG CLAMP SHAFT AND BRACKET WELDMENT, HM130MAX
6	2	0001072	REINFORCEMENT PLATE
5	2	0002888	LOG BUNK CAP, HM130MAX
4	1	0002886	LOG BUNK, CENTER, HM130MAX
3	1	0002887	LOG BUNK, MID, HM130MAX
2	6	0001070	LEVELLING FOOT
1	2	0001073	TRACK RAIL

PARTS LIST

NOTES:

1. DIMENSIONS LOCATED WITHIN SQUARE BRACKETS [ ] ARE IN INCHES.
2. RECOMMENDED SHIPPING BOX SIZE: 83-1/2L X 32W X 24-1/2H in [2120L X 810W X 620H mm].
3. SHIPPING WEIGHT: 141 lb [64 kg].

WOODLAND MILLS FORESTRY EQUIPMENT
171 NORTH PORT RD, UNIT #1
PORT PERRY, ON L9L 1B2, CANADA
1 (855) 476-6455

SIZE	DWG NO	REV
A3	0002903	

SCALE	1:12	DATE	13-10-2019	SHEET	1 OF 1

C:\VAULT\PRODUCTS\SAWMILLS\ACCESSORIES\TRACK EXTENSION KITS\0002903